Ra12.5

Fold (1 : 1)

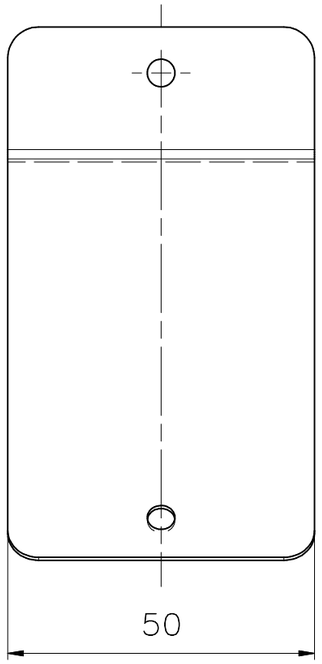

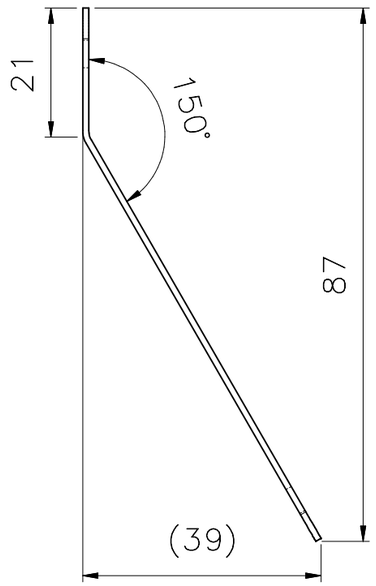

Flat pattern (1 : 1)

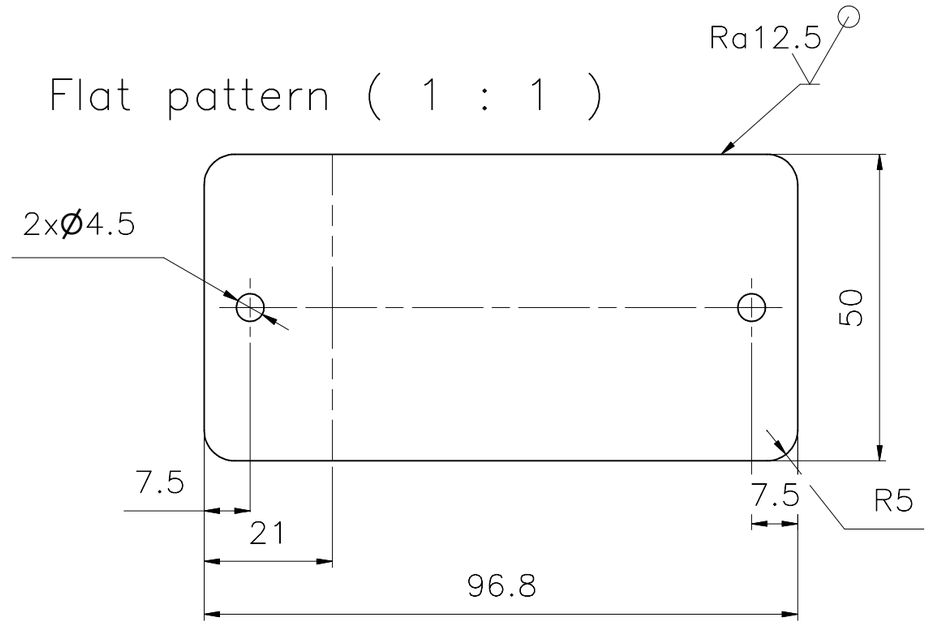

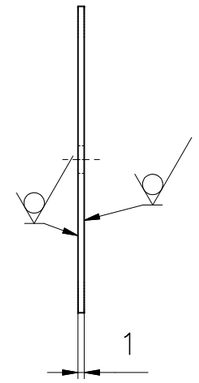

Annotations:

1. Sharpen edges – blunt.
2. Non–tolereted dimmenions make with tolerance classmK .
3. All dimmension are shown without machining tolerances.
4. The roughness of the holes Ra6.3 unless otherwise indicated .

Item	Qty.	Name of part	Drawing number, standard	Rev.	Material	Weight 1pcs. kg	Comments
1	1	Plate 1x50x97	Plate 1x50x97	0	1.4301	0.04	

Inwestor:

Weight 1 set 0,04 kg

Engin.	2016-06-05	papacad
Draw.	2016-06-05	papacad
Check.	2016-06-05	papacad
Ver.	2016-06-05	papacad
Appr.	2016-06-05	papacad

Drawing name: Conveyor Belt 900mm Main Assembly Plate 1x50x97

Drawing number: CB–900 00.00.00.02

Revision: 0

papacad
3D & 2D CAD PROJECTS
free & purchase

www.papacad.com

Scale: 1 : 1

Size: A3

Sheet: 1 /1