Ra12.5

A–A ( 2 : 1 )

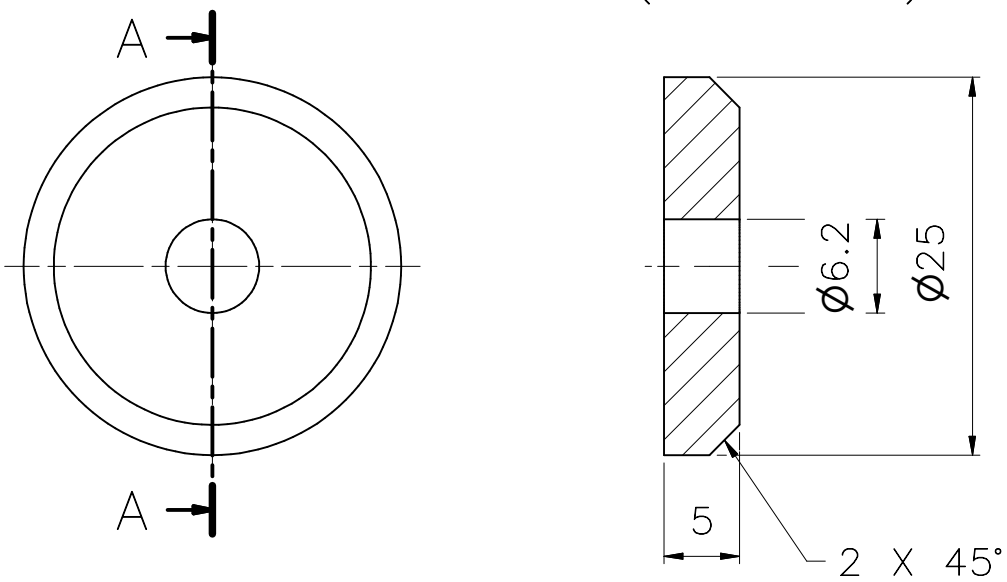


Annotations:

1. Sharpen edges – blunt.
2. Non–tolereted dimmenions make with tolerance classmK .
3. All dimmension are shown without machining tolerances.
4. The roughness of the holes Ra6.3 unless otherwise indicated.

| Item | Qty. | Name of part | Drawing number, standard | Rev. | Material | Weight 1pcs. kg | Comments |
|---|---|---|---|---|---|---|---|
| 1 | 1 | Bar Ø25, L=5 | EN 10060 | 0 | 1.4301 | 0.02 | |

Inwestor:

| | | |
|---|---|---|
| Weight 1 set 0,02 kg | | |
| Engin. | 2016-04-27 | papacad |
| Draw. | 2016-04-27 | papacad |
| Check. | 2016-06-05 | papacad |
| Ver. | 2016-06-05 | papacad |
| Appr. | 2016-06-05 | papacad |

Drawing name: Conveyor Belt 900mm Main Assembly Washer

Drawing number: CB–900 00.00.00.03

Revision: 0

papacad
3D & 2D CAD PROJECTS
free & purchase

www.papacad.com

Scale: 2 : 1

Size: A4

Sheet: 1 /1